WaterSmart Technology, LLC
230 South Olive, Ventura, CA 93001

iMShowerSmart™

Professional Shower Timer

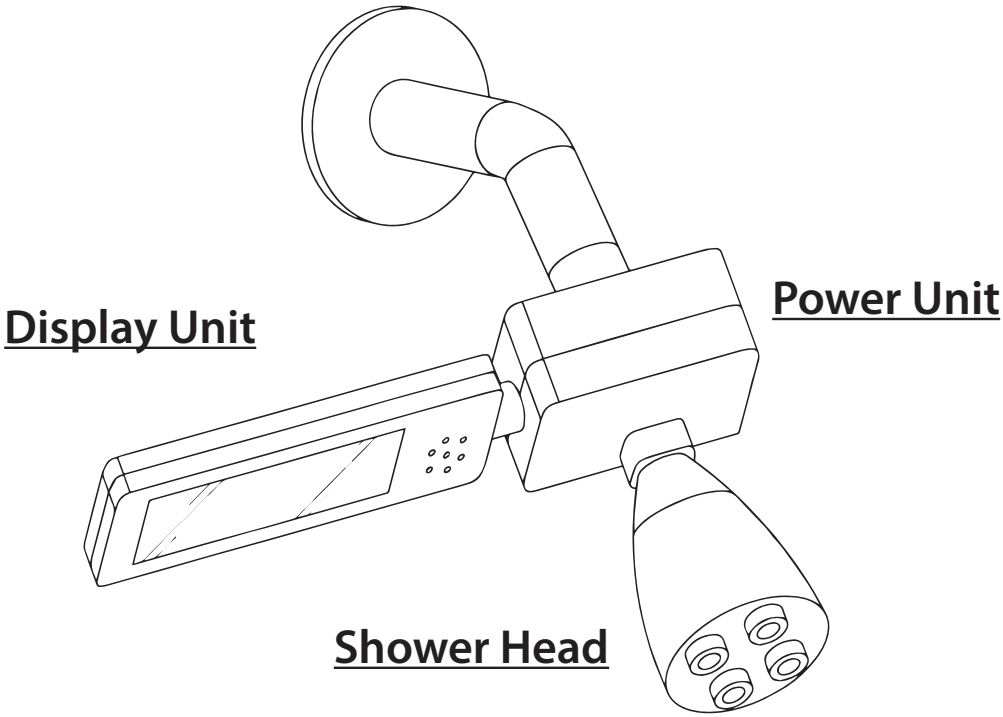

iMShowerSmart Specs

Front View

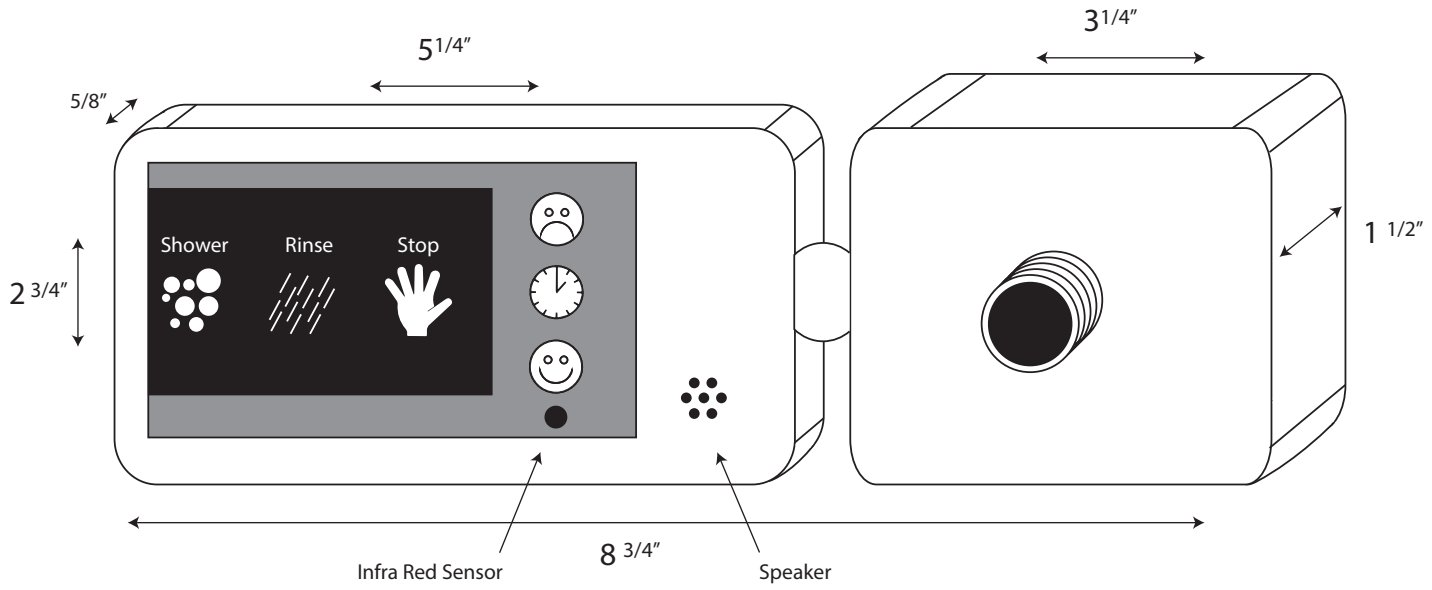

Bottom View

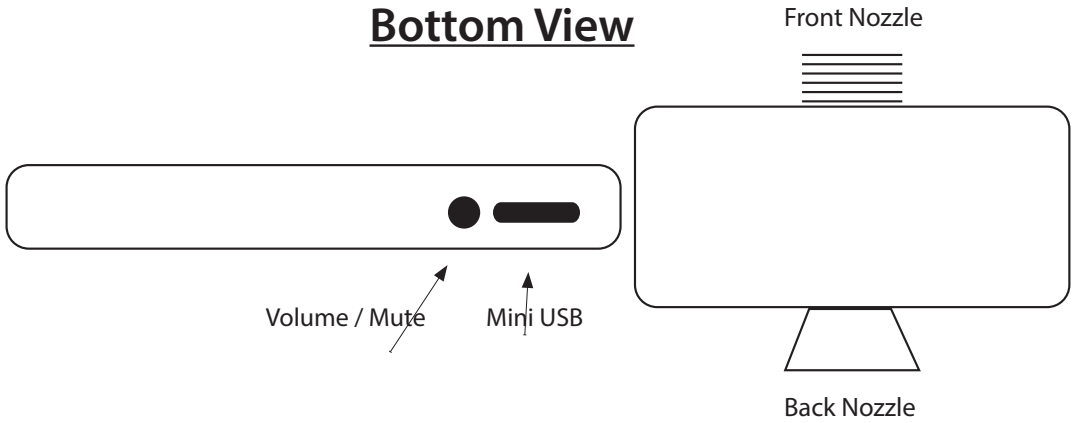

Side View

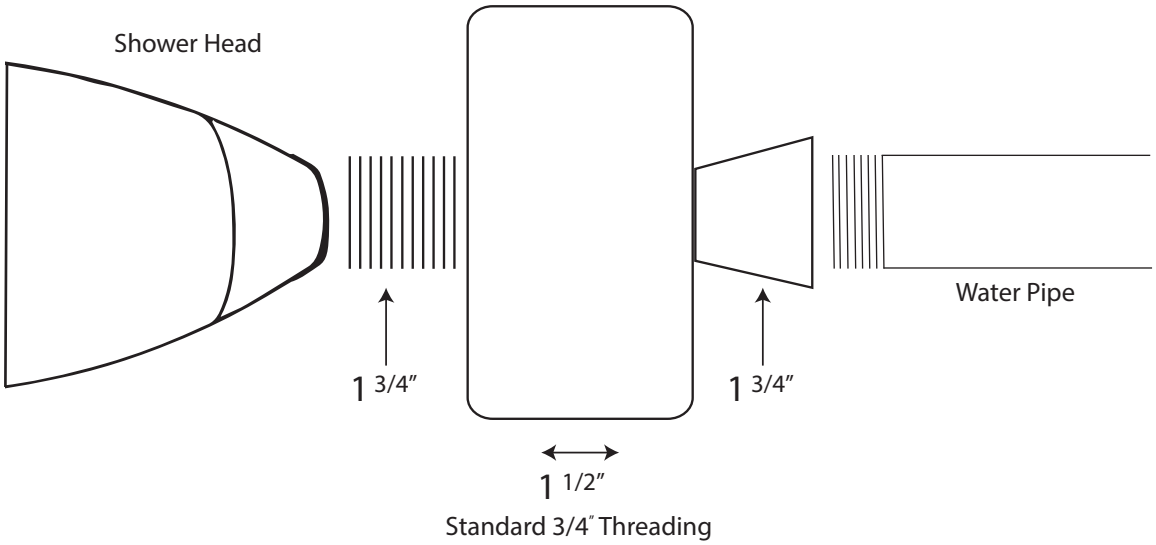

Exploded View

Power Unit

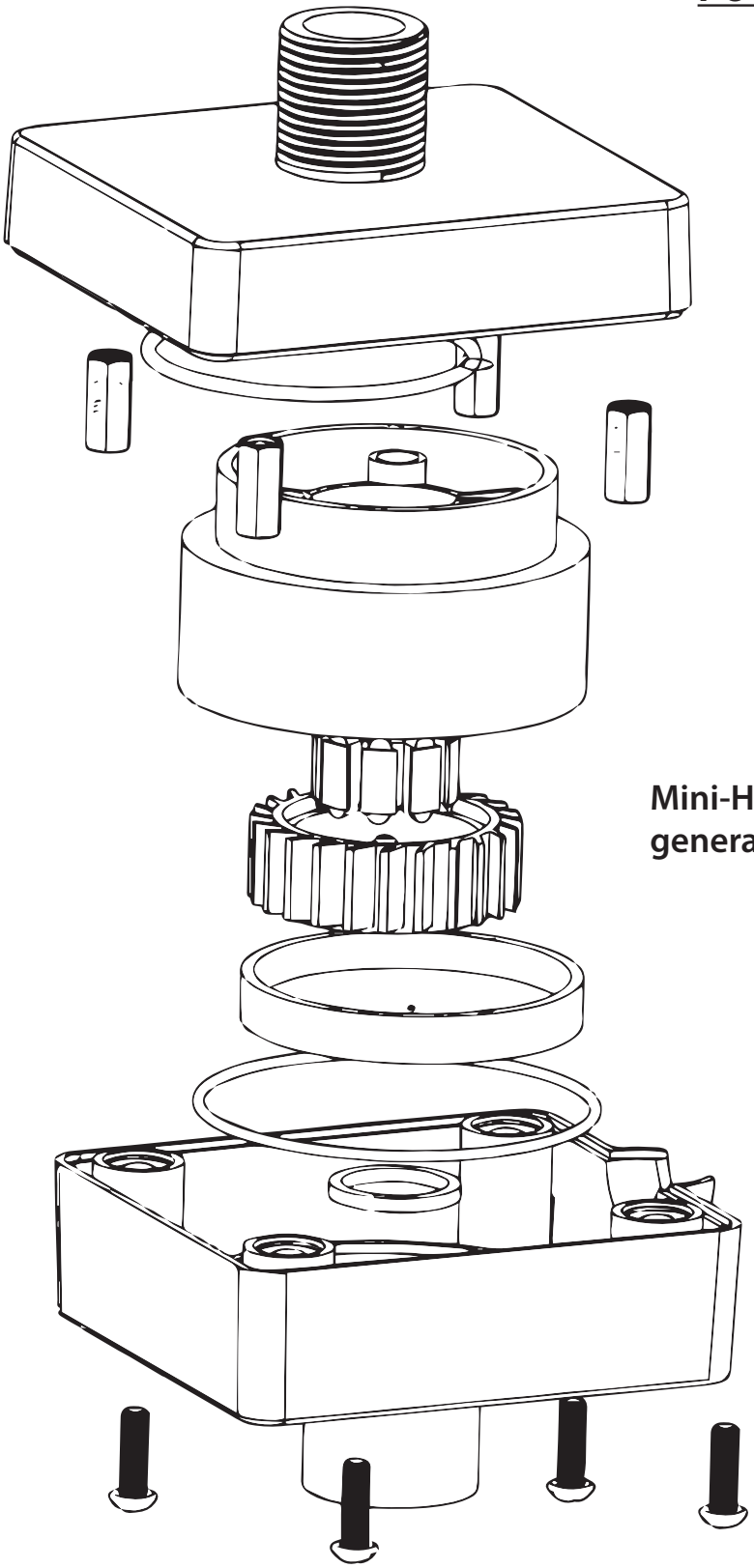

Mini-Hydro power unit generates its own power.

Unit Specifications

Measurements:

Monitor:	Length: 5.75"	Height: 2.75"	Width: .625"
Power Unit:	Length: 3.25"	Height: 2.75"	Width: 1.5"

Composition:

Internal LED:

The display monitor uses low energy consumption LED lights for maximum brightness, longer lifetime, and faster switching.

Printed Circuit Board (PCB):

Electronic components, tracks, pads, circuits, capacitors, resistors, and other features are etched from copper sheets, and laminated onto a non-conductive substrate.

ABS Plastic:

The main housing for both the display unit and power unit are made from ABS plastic (derived from Acrylonitrile, butadiene, and styrene). ABS combines strength, rigidity, hardness, gloss, toughness, electrical insulation properties, and is highly protective from atmospheric humidity.

The unit is water resistant but not waterproof. Please do not submerge the unit and be careful not to let water enter the Mini USB port on the base of the unit.

Polymer Lithium Ion Battery - 1050mA/h:

The unit stores power in a 1050 mA/h polymer lithium ion battery. The battery is slim, extremely light weight and rechargeable via the USB port and when the unit is in use, is constantly recharged by the internal mini-turbine motor. It will hold a charge for 250 hours once it is fully charged.

Mini-Turbine:

The Power Unit houses a mini water turbine, literally a small "rotary engine". The water pressure, and flow of the water, spins the internal mini-hydro turbine, which in turn generates the power needed to run and charge iMShowerSmart.

The motor generates 2.8 volts - 13.7 volts. Standard and optimum is 5 volt range. Minimum water flow required to power the unit is a 2.0 - 2.5 g.p.m. showerhead with a 45 p.s.i. of water pressure (well below most standard homes). This means you should not have to charge it – ever – as the turbine keeps it charged. Worst case, you can plug it in via the USB port and receive a full 250 hour charge.

Infra Red Sensor:

An electronic sensor that measures infrared (IR) light sent to it from a remote control. This enables programming via the optional remote control.

Speaker:

The internal speaker is high volume and waterproof for clear, bright sound. The volume/mute button is located on the bottom of the unit.